ЭНЕРГОМИР
https://energomir.su

HEAVY OIL BURNERS

Ecoflam

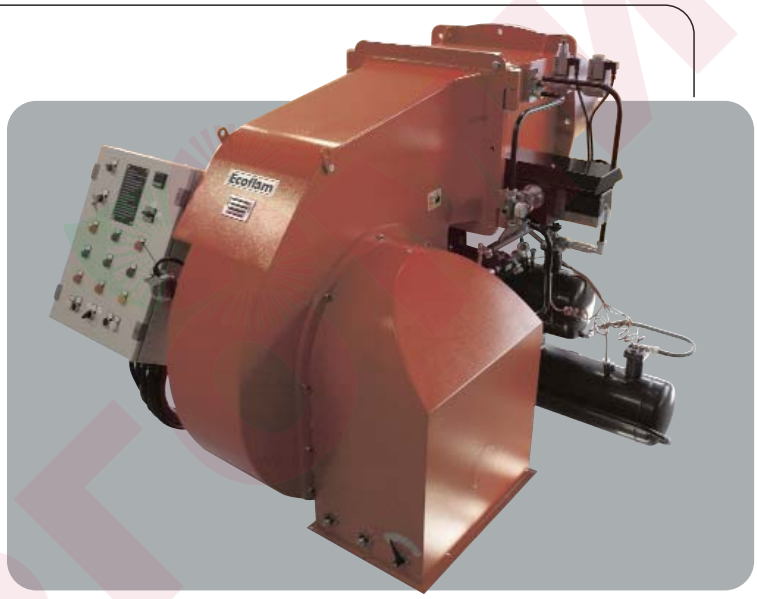

OILFLAM 1500.1 PR
OILFLAM 1800.1 PR

AIR DAMPER MOTOR
230 / 400 V 50 Hz

По вопросам продаж обращайтесь:
ЕКАТЕРИНБУРГ: +7 (343) 374-94-93
ЧЕЛЯБИНСК: +7 (351) 751-28-06
НИЖНИЙ ТАГИЛ: +7 (922) 171-31-23
ТЮМЕНЬ: +7 (3452) 60-84-52
КУРГАН: +7 (3522) 66-29-82
МАГНИТОГОРСК: +7 (922) 016-23-60
УФА: +7 (927) 236-00-24
ПЕРМЬ: +7 (342) 204-62-75
СУРГУТ: +7 (932) 402-58-83
НИЖНЕВАРТОВСК: +7 (3466) 21-98-83

420010293900
420010293900
11.03.2010

Ecoflam

TECHNICAL DATA

MODELS		OILFLAM 1500.1	OILFLAM 1800.1
Thermal power max.	kcal/h	12.931.000	14.655.000
	kW	15.000	17.000
Thermal power min.	kcal/h	4.310.000	4.914.000
	kW	5.000	5.700
Max. flow rate heavy oil	kg/h	1.319	1.495
Min. flow rate heavy oil	kg/h	440	501
Feeding power	50 Hz V	230/400	230/400
Fan motor	kW	45	55
Pump motor	kW	4	4
Rpm	N°	2.800	2.800
Ignition transformer	kV/mA	8/20	8/20
Control box	LANDIS	LAL 1.25	LAL 1.25
Fuel :		Heavy oil (L.C.V. 9.800 kcal/kg max. visc 50°E at 50°C)	

WORKING FIELDS

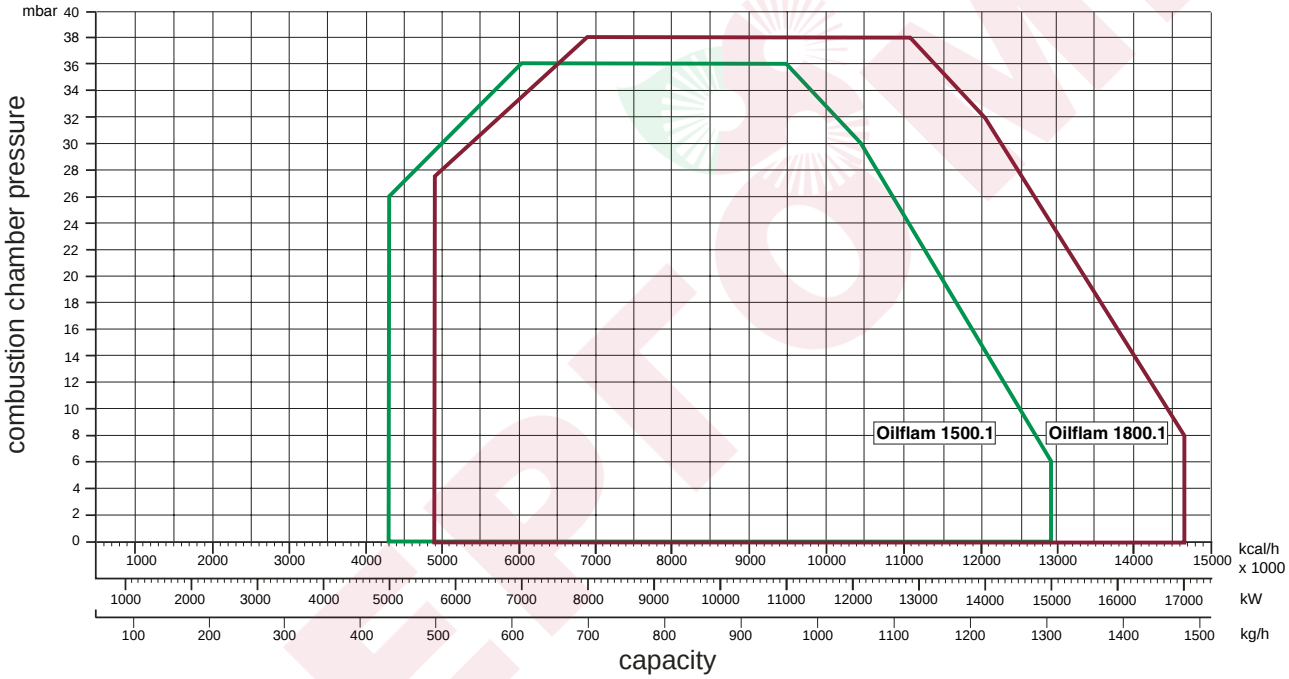

OVERALL DIMENSIONS

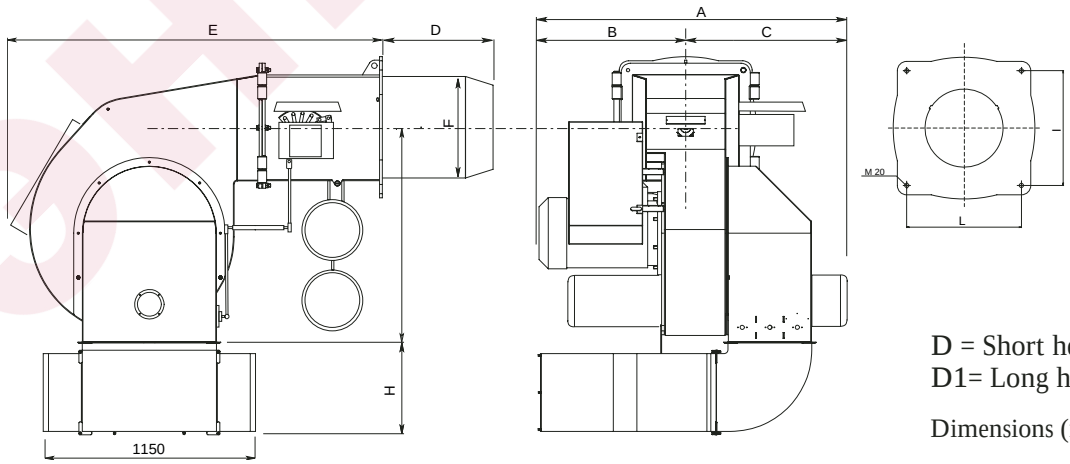

D = Short head
D1= Long head

Dimensions (mm)

MODELS	A	B	C	D	D1	E	F	G	H	I	L	M
Oilflam 15/1800.1	1948	860	1088	590	-	1910	550	1167	530	620	620	M20

BURNER INSTALLATION

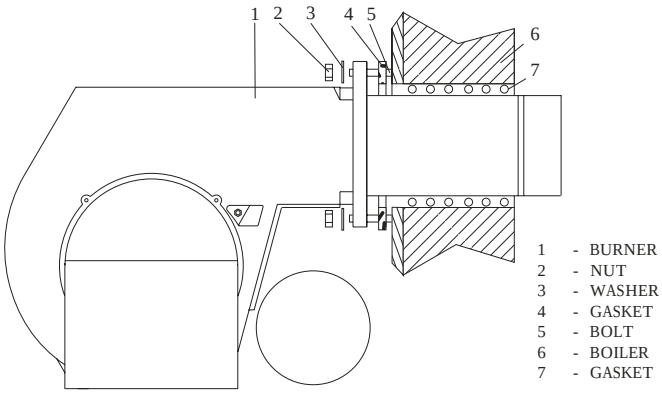

PRIMING AND ADJUSTMENT OF OIL PUMP

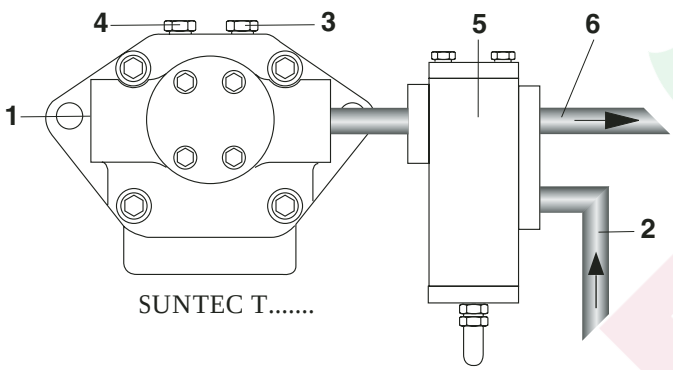

1 - INLET
2 - RETURN
3 - BLEED AND PRESSURE GAUGE PORT
4 - VACUUM GAUGE PORT
5 - REGULATING VALVE TV
6 - TO NOZZLE

WARNING: For a correct working of the pump, verify what follows:

Pump :	SUNTEC T...C105
Oil temperature at the pump:	Max. 140 °C
Maximum allowable pressures:	Max. 5 bar on inlet

VERIFY:
- That piping system is perfectly sealed;
- That the use of hoses is avoided whenever is possible (use copper pipes preferably);
- That depression is not greater than 0,45 bar, to avoid pump's cavitation;
- That check valve is suitably designed for the duty;

The pump pressure is set at a value of 22-25 bar during the testing of burners. Before starting the burner, bleed the air in the pump through the gauge port. Fill the piping with light-oil to facilitate the pump priming. Start the burner and check the pump feeding pressure. In case the pump priming does not take place during the first prepurging, with a consequent, subsequent lock-out of the burner, rearm the burner's lock-out to restart, by pushing the button on the control box. If, after a successful pump priming, the burner locks-out after the prepurging, due to a fuel pressure drop in the pump, rearm the burner's lock-out to restart the burner. Do never allow the pump working without oil for more than three minutes. Note: before starting the burner, check that the return pipe is open. An eventual obstruction could damage the pump sealing device.

PRESSURE REGULATING VALVE ADJUSTMENT

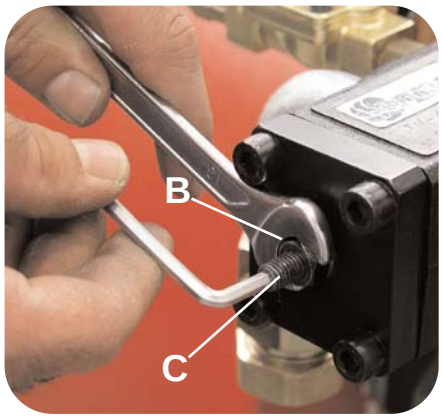

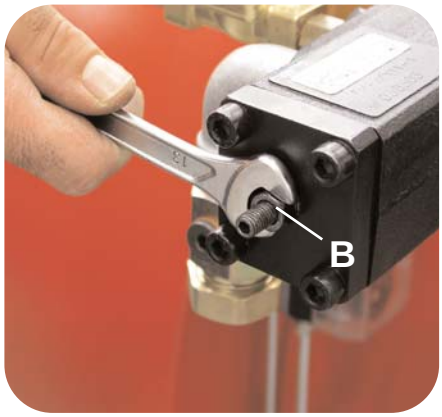

1) Remove the cap A of the pressure regulating valve TV.

2) Loosen the fixing nut B and use an allen wrench on the screw C to adjust the delivery oil pressure. To increase the pressure turn clockwise, to decrease the pressure turn anti-clockwise.

3) Tighten the nut B and pay attention not to turn also the adjusting screw.

4) Screw on the cap A, back to its previous position.

ЭНЕРГОМИР

PUMP'S PRESSURE / OIL TEMPERATURE DIAGRAM

Pump inlet pressure:the vaporisation of light fraction of heated heavy oil causes premature pump wear, to avoid this, use the inlet pressures shown in the graph.

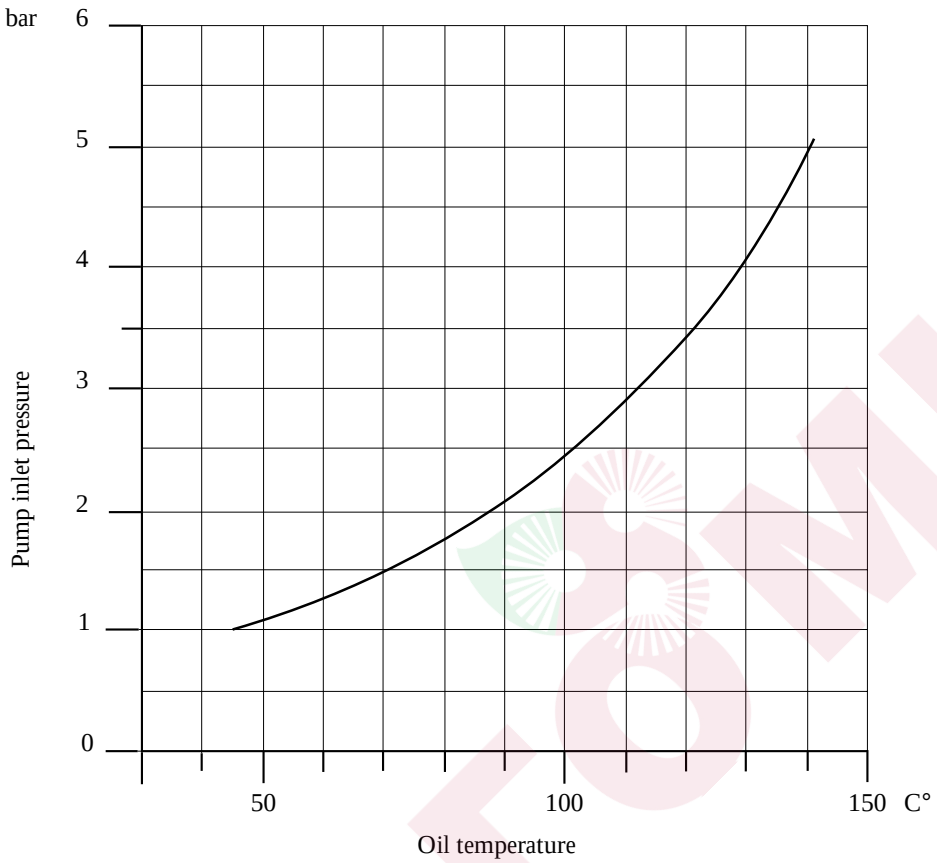

CHECKS TO BE MADE TO ENSURE A PROPER INSTALLATION:

Before proceeding with the filling of the fuel system and subsequent burner start up, it is advisable to carry out the following checks:

- Power line must be adequate to system's adsorbed load.
- Fuses must be adequate to the system's load.
- Boiler's thermostats must have been properly connected.
- Voltage and frequency must be within the specified limits.
- Fuel type must be the one specified by the burner manufacturer.
- Feed piping section must be adequate to the requested fuel flow rate.
- Filters, cocks as well as fittings must have been properly installed.
- Blast tube length must be the one specified by the boiler manufacturer.
- Nozzle's flow rate of the burner must be adequate to boiler's output

Ecoflam

TV VALVE

TV

TV - 11 - Ed 4 - June 99

This is a general specification leaflet ; for specific applications not covered herein, contact Suntec.

The SUNTEC **TV** valve is a pressure regulating valve.

APPLICATIONS

- Light and heavy oil.
- Capacity up to 5000 l/h.
- May be used with the SUNTEC **T** pump.

VALVE OPERATING PRINCIPLE

The pressure of the nozzle line is adjusted with the adjusting screw of the TV valve.
The oil in excess to nozzle requirement is dumped to the return.

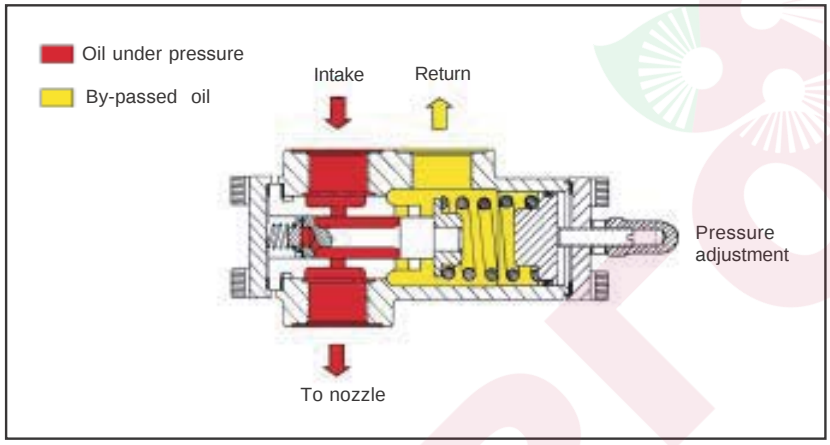

VALVE IDENTIFICATION

(Not all model combinations are available Consult your Suntec representative)

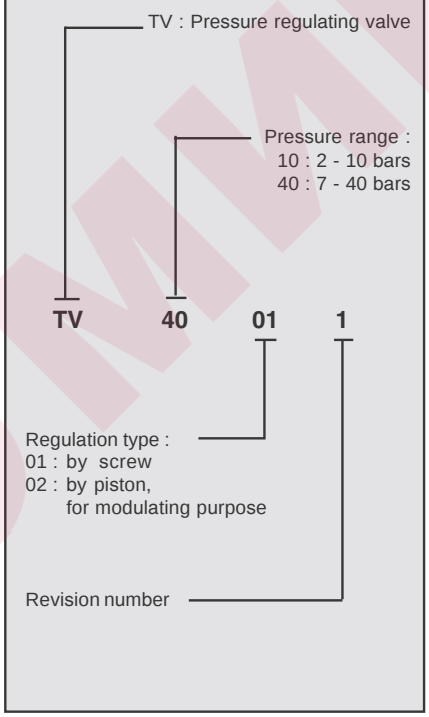

INSTALLATION

Two pipe system : oil in excess is returned to tank.
One pipe system : oil in excess is returned to pump suction.

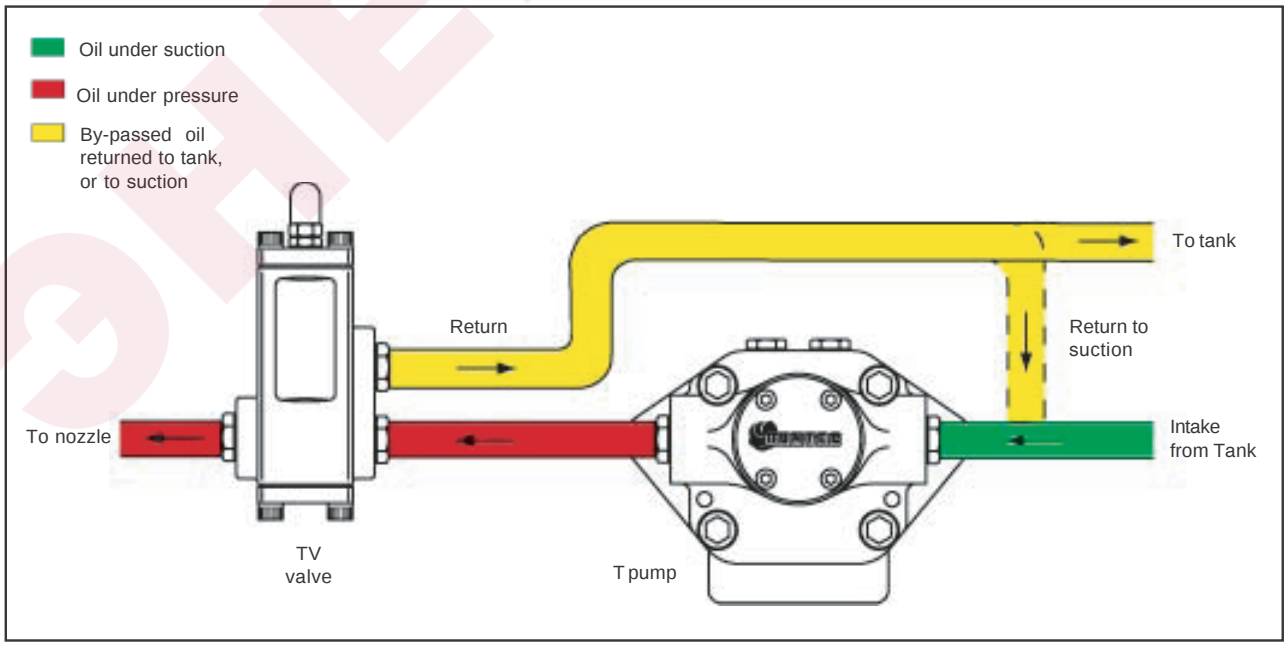

TECHNICAL DATA

General

Connection threads	Cylindrical according to ISO 228/1
Inlet	G 3/4
Nozzle outlet	G 3/4
Return	G 3/4
Weight	3 kg

Hydraulic data

Pressure ranges	10 : 2 - 10 bars (delivery pressure setting : 7 bars) 40 : 7 - 40 bars (delivery pressure setting : 20 bars)
Operating viscosity	4 - 450 cSt
Oil temperature	0 - 140°C max. in the valve.

MOUNTING POSITION

TV valve may be mounted in any position.

PRESSURE ADJUSTMENT

Remove cap-nut ❶ and washer ❷, unscrew lock-nut ❹.

To increase pressure, turn adjusting screw ❸ clockwise.

To decrease the pressure, turn screw anticlockwise.

Block lock-nut ❹, refasten washer ❷ and cap-nut ❶.

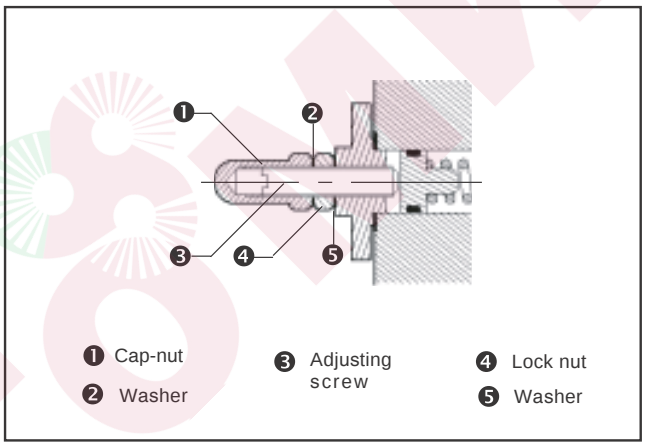

DIMENSIONS

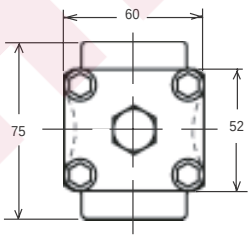

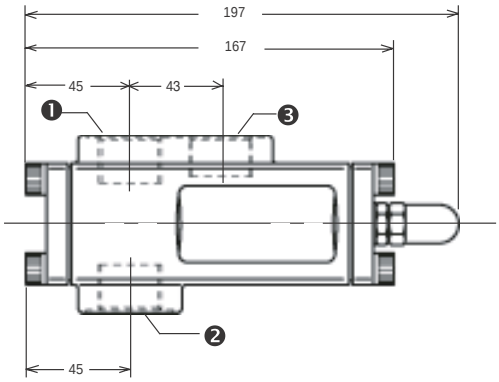

❶ Intake or nozzle outlet ❷ Nozzle outlet or intake ❸ Return

We reserve the right to change specifications without prior notice.

OIL PUMP TYPE T
GEAR SIZES 2-3-4-5

T

T - 11 - Ed 10 - May 2004

This is a general specification leaflet ; for specific applications not covered herein, contact Suntec.

The SUNTEC **T** oil pump is specially designed for industrial heating applications using light or heavy oils with high capacity. It is fitted with a preheater location to render cold starting easier.

APPLICATIONS

- Light and heavy oil.
- SUNTEC recommend the use of a SUNTEC TV valve to regulate the pump pressure.

PUMP OPERATING PRINCIPLE

The gear set draws oil from the tank and transfers it to an external valve that regulates the oil pressure.

Bleed :

The plug of the pressure gauge port must be loosened until the air is evacuated from the system.

Note :

The bypass plug inserted beween high pressure and shaft seal is only intended to change the pump rotation, check the presence of this plug with a 4 mm Allen key in the pressure outlet of the pump.
Caution : changing the direction of pump rotation involves changing of all pump connections.

PREHEATING FACILITY

Care should be taken to avoid starting pump with high viscosity cold oil leading to pump and coupling damage. For this reason, the T pump body includes a drilling to accept an electric preheater. This drilling has been located to give maximum heat transfer from the heater to the oil in the pump without there being direct contact between the heater cartridge and the oil.

Heaters should be connected for a period of time prior to starting the pump. When the right temperature is reached, they can be switched off or left permanently switched on to maintain fluid oil in the pump during the periodic burner shut-downs.

The oil supply, pipes and filters must be separately heated.

PUMP IDENTIFICATION

(Not all model combinations are available Consult your Suntec representative)

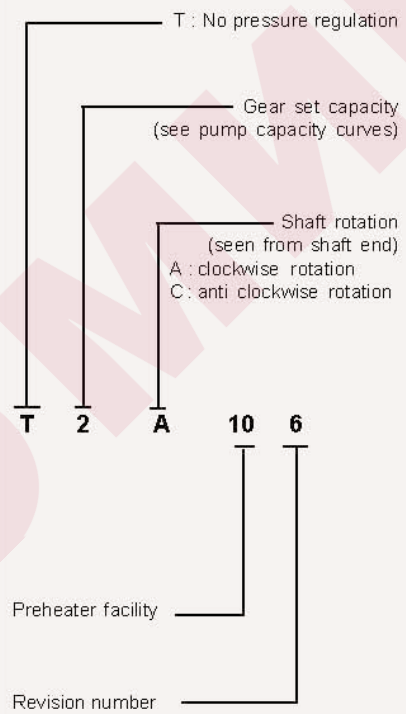

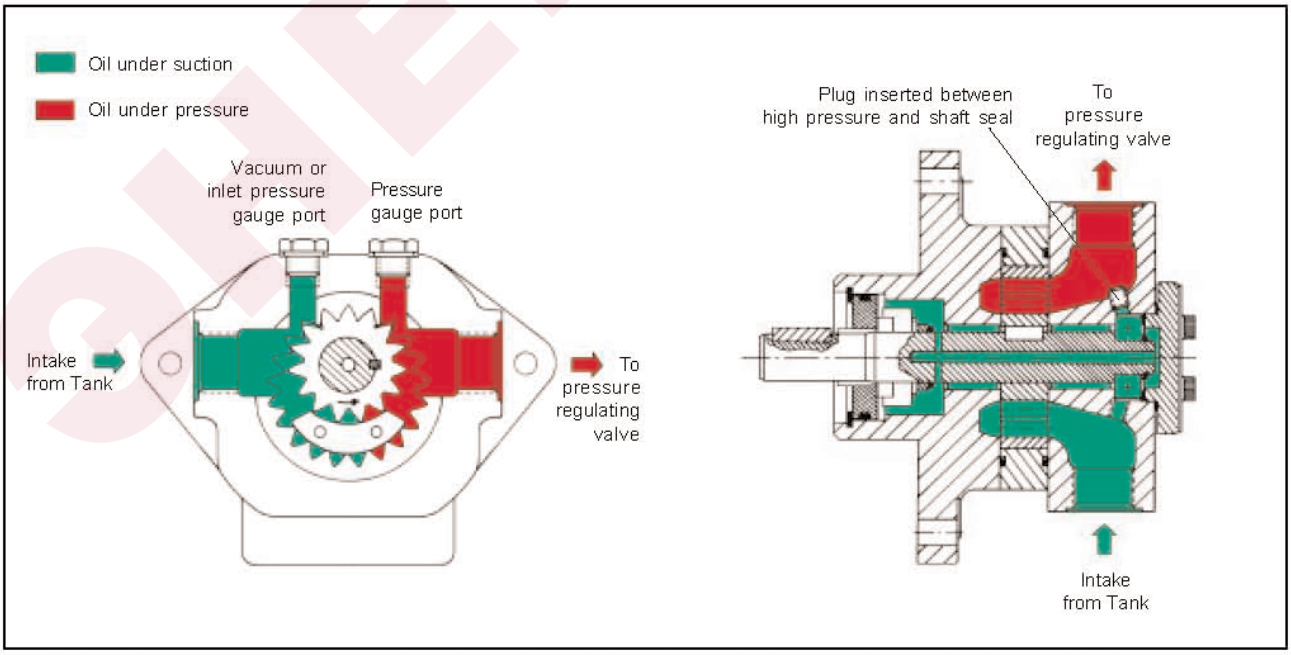

TECHNICAL DATA

General

Mounting	Flange mounting
Connection threads	Cylindrical according to ISO 228/1
Shaft	Ø 20 mm
Weight	7,8 kg (T2) - 8,1 kg (T3) 8,7 kg (T4) - 9,4 kg (T5)

Hydraulic data

Nozzle pressure range	40 bars max. (T2, T3, T4) 30 bars max. (T5)
Operating viscosity	4 - 450 mm²/s (cSt)
Oil temperature	0 - 140°C in the pump
Inlet pressure	light oil : 0,45 bars max. vacuum to prevent air separation from oil heavy oil : 5 bars max.
Rated speed	3600 rpm max.
Torque (@ 40 rpm)	0,4 N.m

Choice of heater

Cartridge	Ø 12 mm
Fitting	according to EN 50262
Rating	80-100 W

Pump capacity

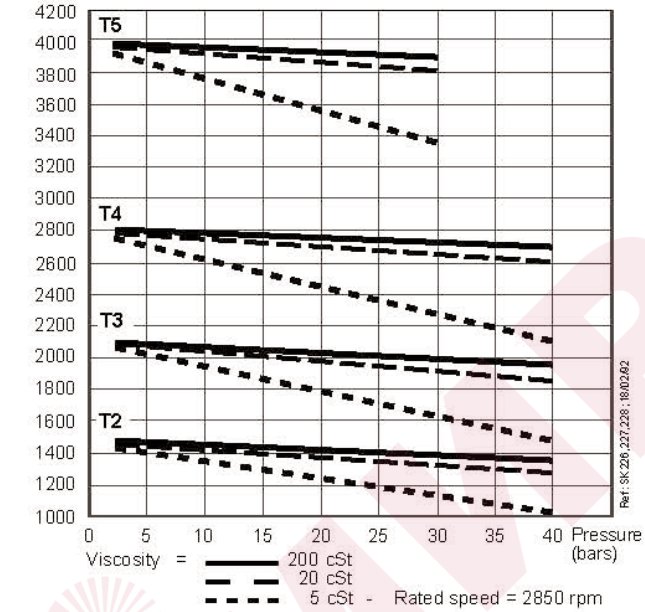

Data shown are for new pumps, with no allowance for wear.

Power consumption

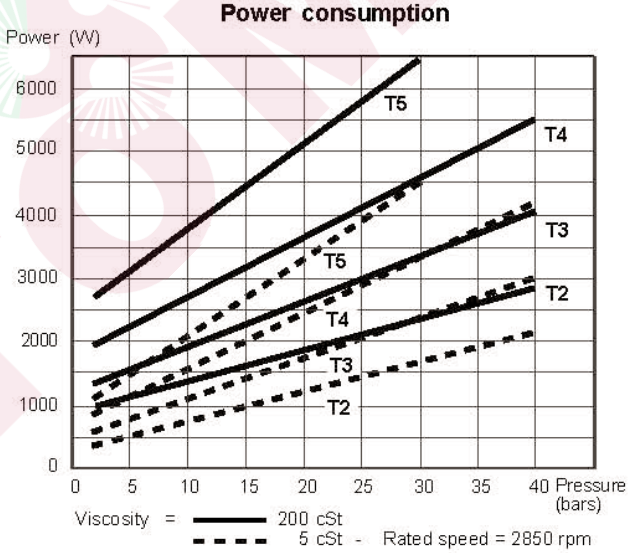

Data shown are for new pumps, with no allowance for wear.

PUMP DIMENSIONS

Example shows "A" rotation - Reverse all pump connections for "C" rotation.

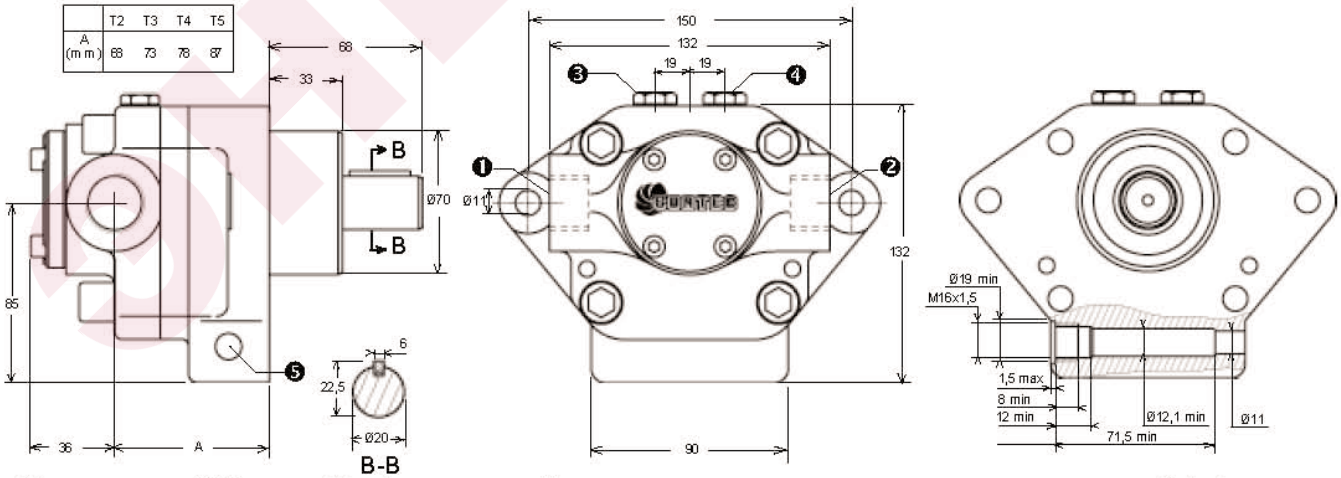

❶ Suction ❷ Pressure outlet and internal by-pass plug ❸ Vacuum or inlet pressure gauge port ❹ Pressure gauge port ❺ Preheater cavity

Ecoflam

Drawing for fluid fuel oil up to 50°E at 50°C

Oilflam 1800.1 MD

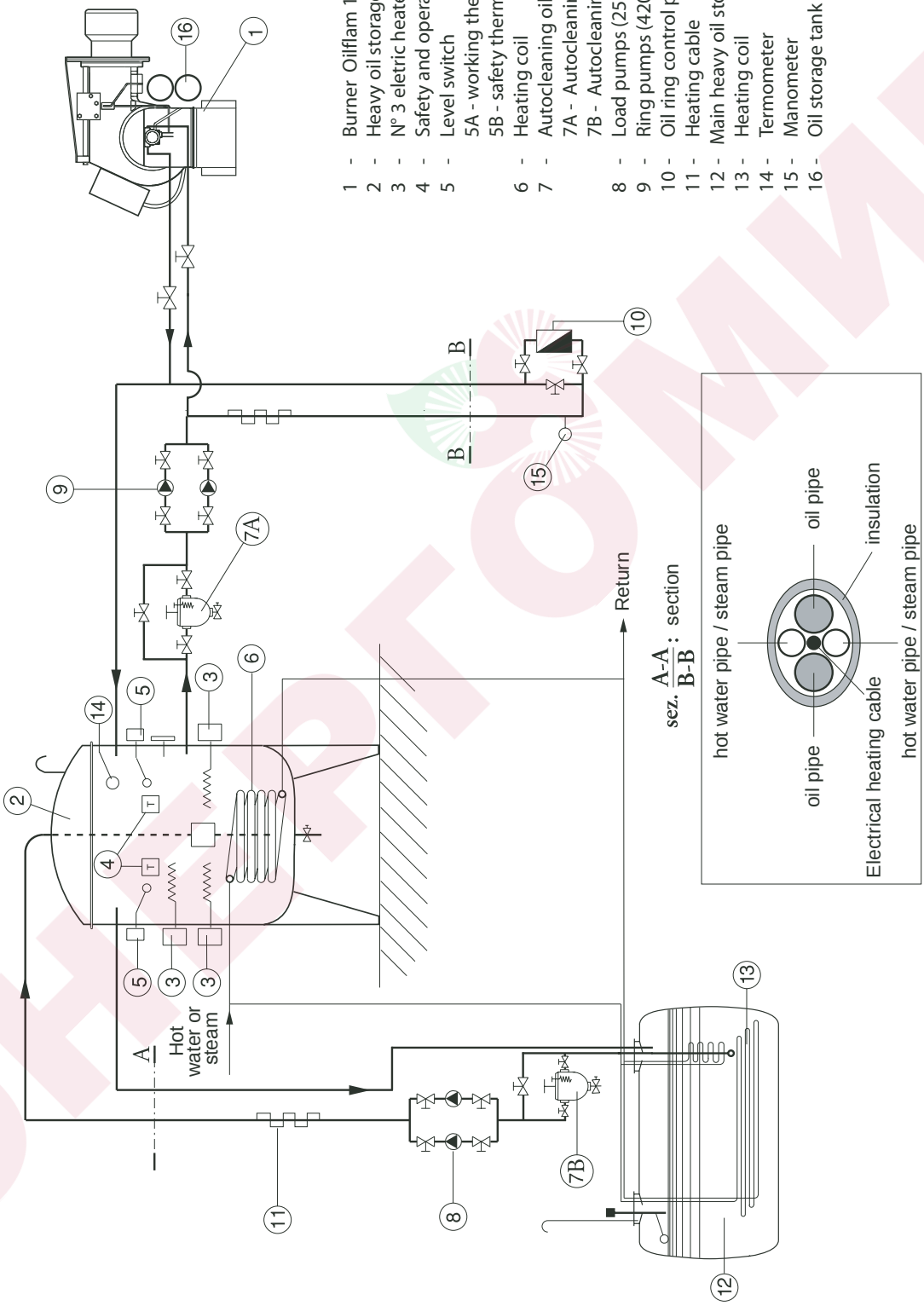

BEFORE PROCEEDING WITH THE FILLING OF THE OIL SYSTEM, CHECK THE FOLLOWING POINTS:
- Motor's direction of rotation (with 3phase version)
- There must be fuel in the tank
- Fuel cocks must be open
- Fuel return piping must be free from obstructions

After having checked all the above items, proceed as follows:
- Connect a fuel pressure gauge
- Set OUT1 - OUT2 - OUT3 - OUT 4 to 0°C on GEFRAN regulator
- Disconnect the resistors power cable from the motor's remote control switch, and insulate it temporarily
- Unplug the safety box
- Start the burner and manually operate the pump motor's remote control switch until the oil system is filled up.

Note: the oil system can be considered filled when pressure gauge will show a constant reading of 16÷18 bar.

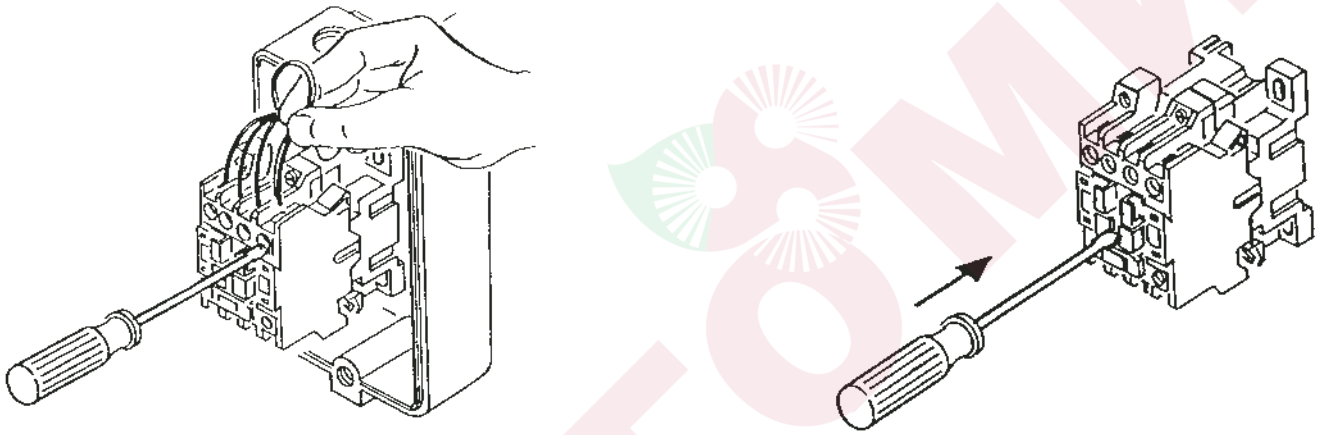

When done, shut off the burner, switch off power and restore initial conditions as follows:
- Reconnect resistors power cable
- Set OUT1 - OUT2 - OUT3 - OUT 4 on GEFRAN regulator to the initial value.
- Plug in the control box

CHECKS TO BE MADE TO ENSURE A PROPER INSTALLATION:

Before proceeding with the filling of the fuel system and subsequent burner start up, it is advisable to carry out the following checks:
- Power line must be adequate to system's adsorbed load
- Fuses must be adequate to the system's load
- Boiler's thermostats must have been properly connected
- Voltage and frequency must be within the specified limits
- Fuel type must be the one specified by the burner manufacturer
- Feed piping section must be adequate to the requested fuel flow rate
- Filters, cocks as well as fittings must have been properly installed
- Blast tube length must be the one specified by the boiler manufacturer
- Nozzle's flow rate of the burner must be adequate to boiler's output

MODULATING OPERATION

With the bumer in the start position and the appliance thermostats enabled, power is delivered to the resistances (G) of the preheater and heating cartridges for the pumps and the fuel supply line to the head (O). When the preheater thermostat reaches the set value, (usually a minimum of about 90°C is necessary to guarantee a good level of circulation) the pump start-up is enabled (set point on out 1, if using the GEFRAN 200 thermoregulating device). If the preheating system of the tank is also equipped for a fluid exchanger (hot water, steam, diathermic oil) the thermostat may enable a contact in the terminal block for any stop-start of the fluid electrovalve. This is not a standard solution as the heated fluid is normally always connected. The pump starts to send oil (the head has already been heated by its cartridge (O) and therefore has no residue of cold dense oil) which flows from the tank to the head and then to the return line of the ring. When the head thermostat reaches the set value (usually about 70-30°C the cycle starts properly and the control programmer enables start-up. The servomotor sets itself at minimum (see chapter on regulation) acting on the air and fùel via the pressure regulator on the return.

The electromagnet (A) opens the nozzle (Q) in the followmg condition :

- sparks from the ignition electrodes are generated by the transformer also governed by the burner control device.

If the cell fails to detect the flame the burner shuts down (with the cyclic control programmer cutting in). Once ignition has taken place and after the flame stabilisation period, the system starts operating in modulating mode.

- Before start-up make sure that the pump and delivery pipes are completely filled with hot fuel oil; the absence of fuel oil can cause pump seizure.
- If there is a block, a specific waring light on the programmer and on the burner front control board lights up and this signal is usually sent to the main control board of the equipment using the burner, setting off a buzzer and warning light.
- A few blocks are normal on first starting up (up to about 4); to release press the button on the programmer (also found on the front of the bumer control board) for repeating the start cycle. Should they continue to occur seek the help of a specialised technician.

N.B. The position of the programmer at the time of the block is memorised to supply an indication of the cause of this block.

OIL DELIVERY ADJUSTMENT

The diagram illustrates the fuel feeding system of these type of burners, which incorporates a by-pass nozzle with oil flow regulation on its return pipe. The oil supply is varied by acting on the nozzle through the pressure in the return line. Max. oil supply is therefore reached when the pressure in the pump line is about 30 bar and the return line is fully closed; min. oil supply when the return line is fully open(see also diagram BERGONZO). Relevant pressure readings in the return line are as follows (return oil pressure has to be measured on “M” pressure gauge):

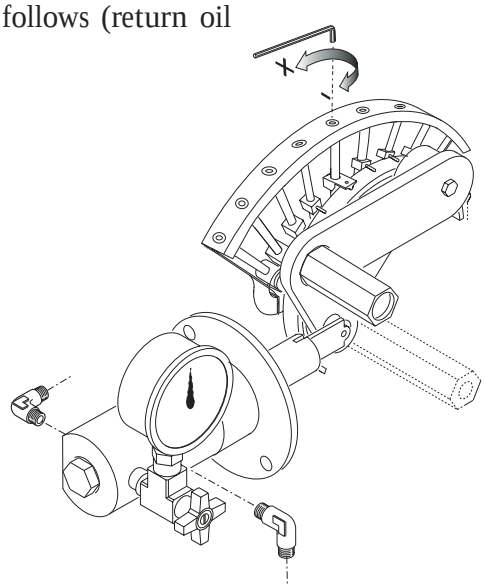

Pump pressure 25-30 bar.
Max Burner output, return oil pressure:
FLUIDICS nozzle : 16 ÷19 bar.
BERGONZO nozzle : 20 ÷24 bar.

Min Burner output, return oil pressure:
FLUIDICS nozzle : 6 ÷9 bar
BERGONZO nozzle : 4 ÷8 bar

PRE - PURGING PHASE

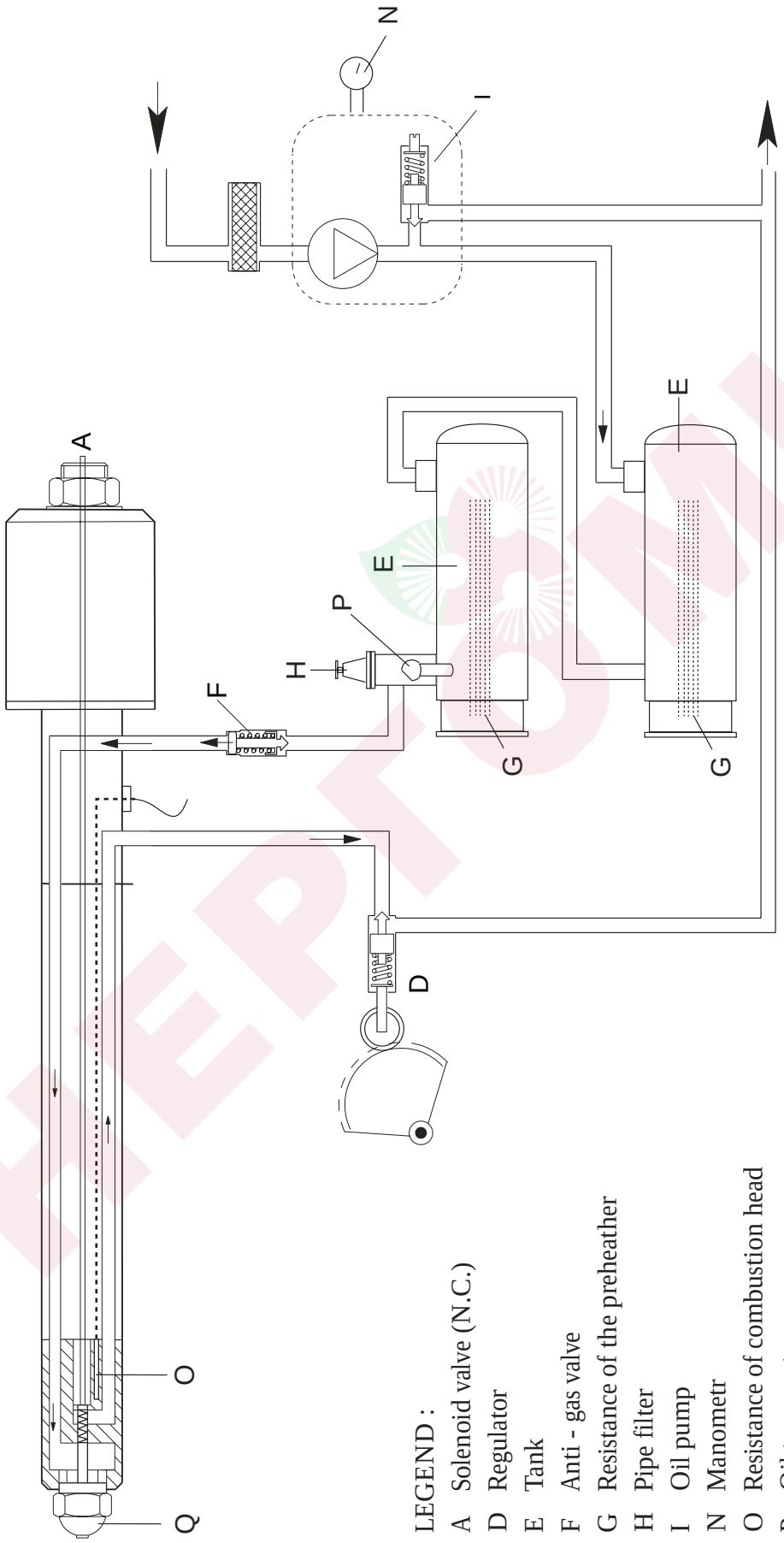

LEGEND :

A Solenoid valve (N.C.)
D Regulator
E Tank
F Anti - gas valve
G Resistance of the preheather
H Pipe filter
I Oil pump
N Manometr
O Resistance of combustion head
P Oil temperature sensor
Q Oil nozzle

FLUIDICS NOZZLE

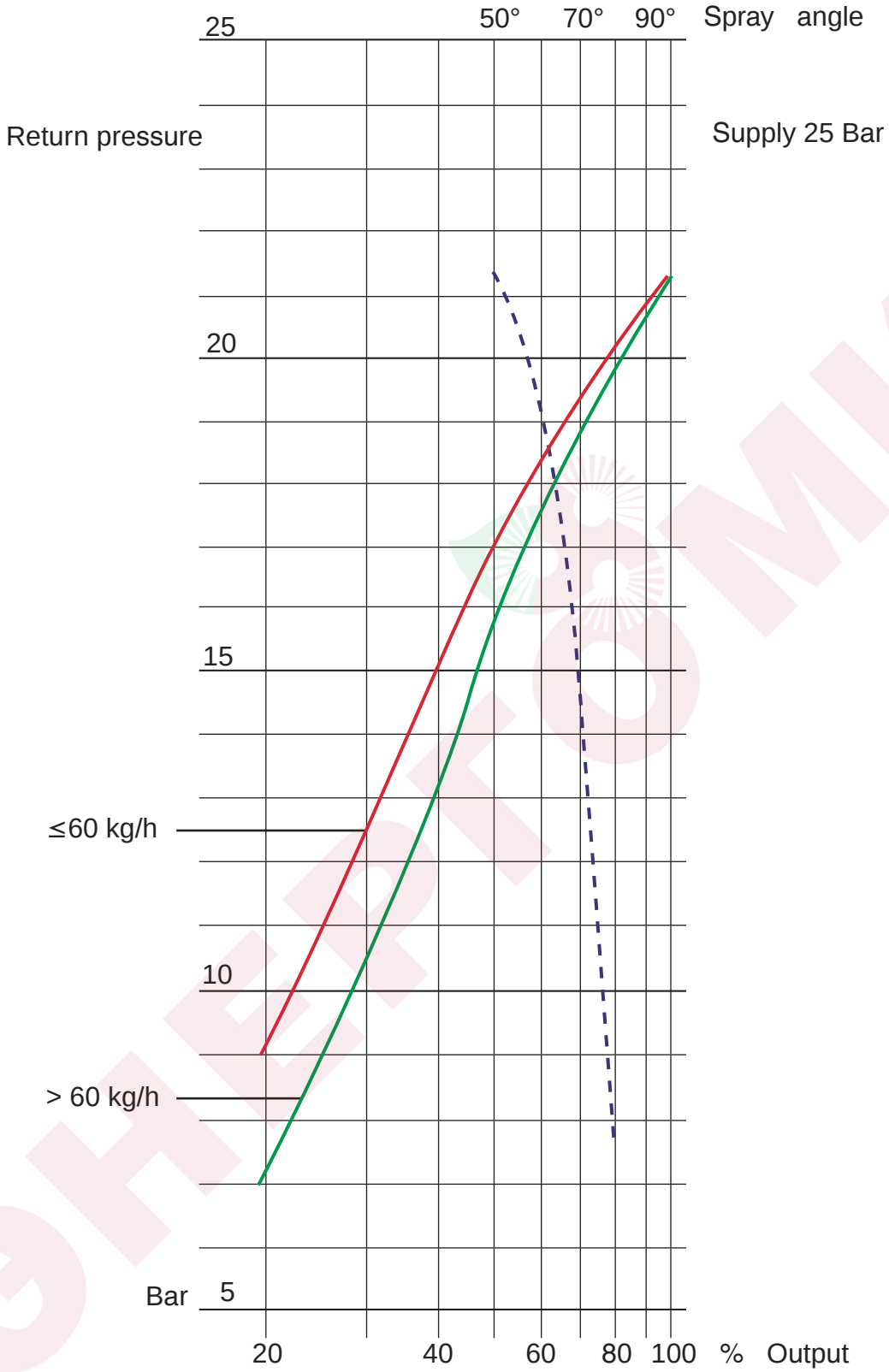

COMBUSTION AIR FLOW ADJUSTMENT

LANDIS SQM 50.481A2

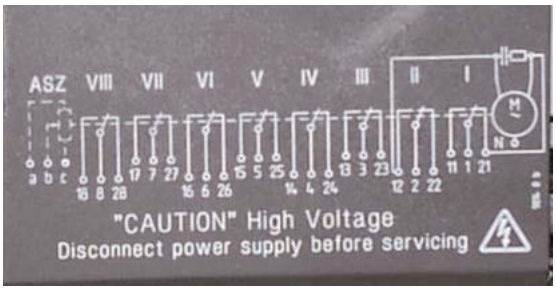

Remove cover to gain access to the adjusting cams. The cams are to be adjusted through the suitable key provided . Description:

I - Limit switch for air damper “High Flame” position adjustment.
II - Limit switch for the air damper position at burner’s shut down.
III - Limit switch for ignition flame “Min power” position adjustment.
IV - Limit switch for air damper “Low Flame” position adjustment.
V - Limit switch “NOT USED”
VI - Limit switch “NOT USED”

SETTING THE FIRING HEAD

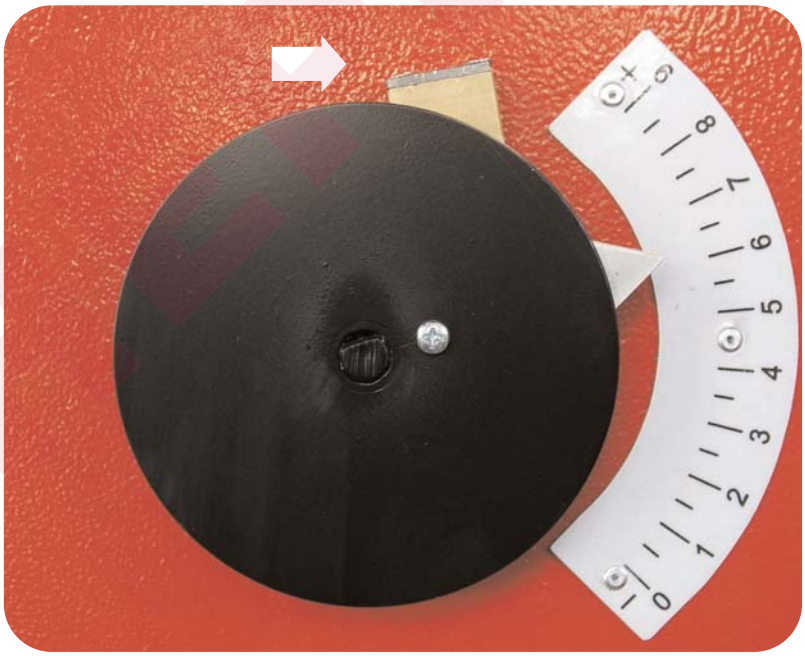

ADJUSTMENT OF FUEL TEMPERATURE

The display shows oil temperature.
The 4 leds are related to the following functions:
Out 1: contact driving working heaters
Out 2: contact driving upper heaters KMRL1
Out 3: contact driving upper heaters KMRL2
Out 4: Burner start driving contact (as the oil reaches this temp the pump is activated)
- The temperatures are already properly Factory setted :
  Out 1(113°)- Out 2(115°)- Out 3(120°)- Out 4(105°).
- To modify factory temperature setting act as follows:
- press key "F"
- the led Out1 starts to flash, if You need to modify minimum oil temperature press increase or decrease button, after confirm the new value pressing again "F"
- if You need to modify an other temperature press again "F" untill You the relevant led flashes.

Please take care: if key "F" is pressed for a too long time, You enter in "configuration level" phase1, (see "CF1" on the display); these parameters are Factory setted and they have not to be modified: if You enter this function – You see CF1 flashing on the display – wait 10 seconds untill the regulator automatically goes out from "configuration level".

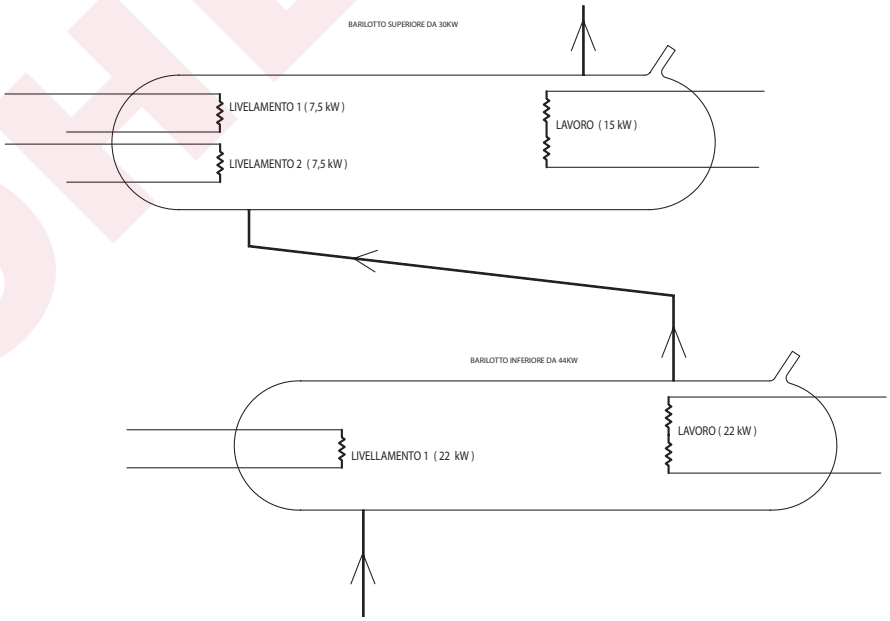

POSITION OF IGNITION ELECTRODES

For a correct burner ignition, carefully respect the dimensions shown by the picture

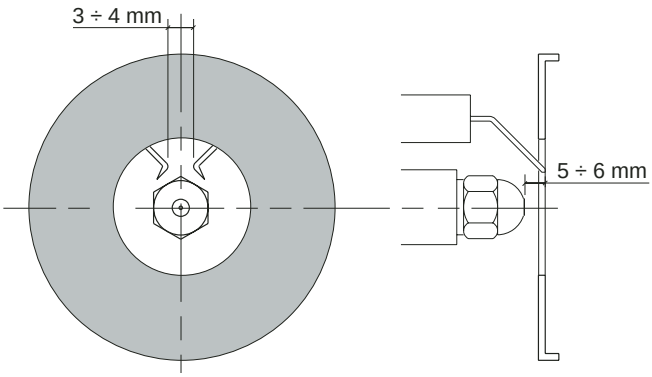

DESCRIPTION OF CONTROL PANEL

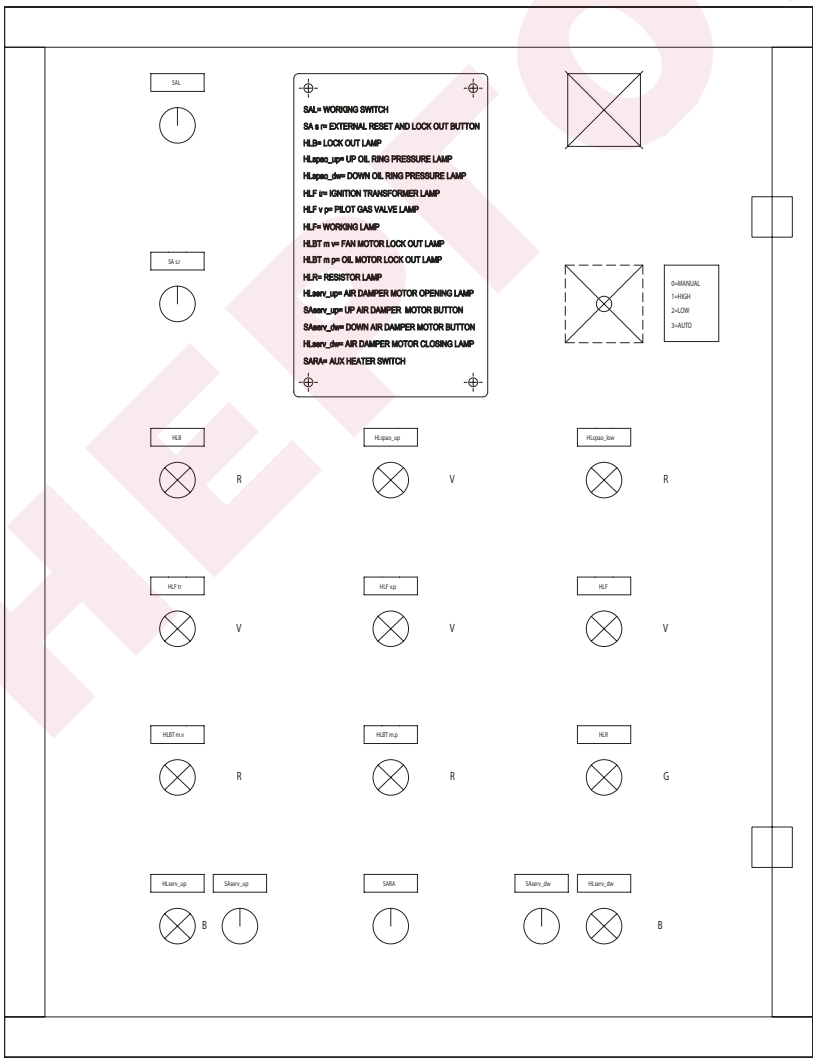

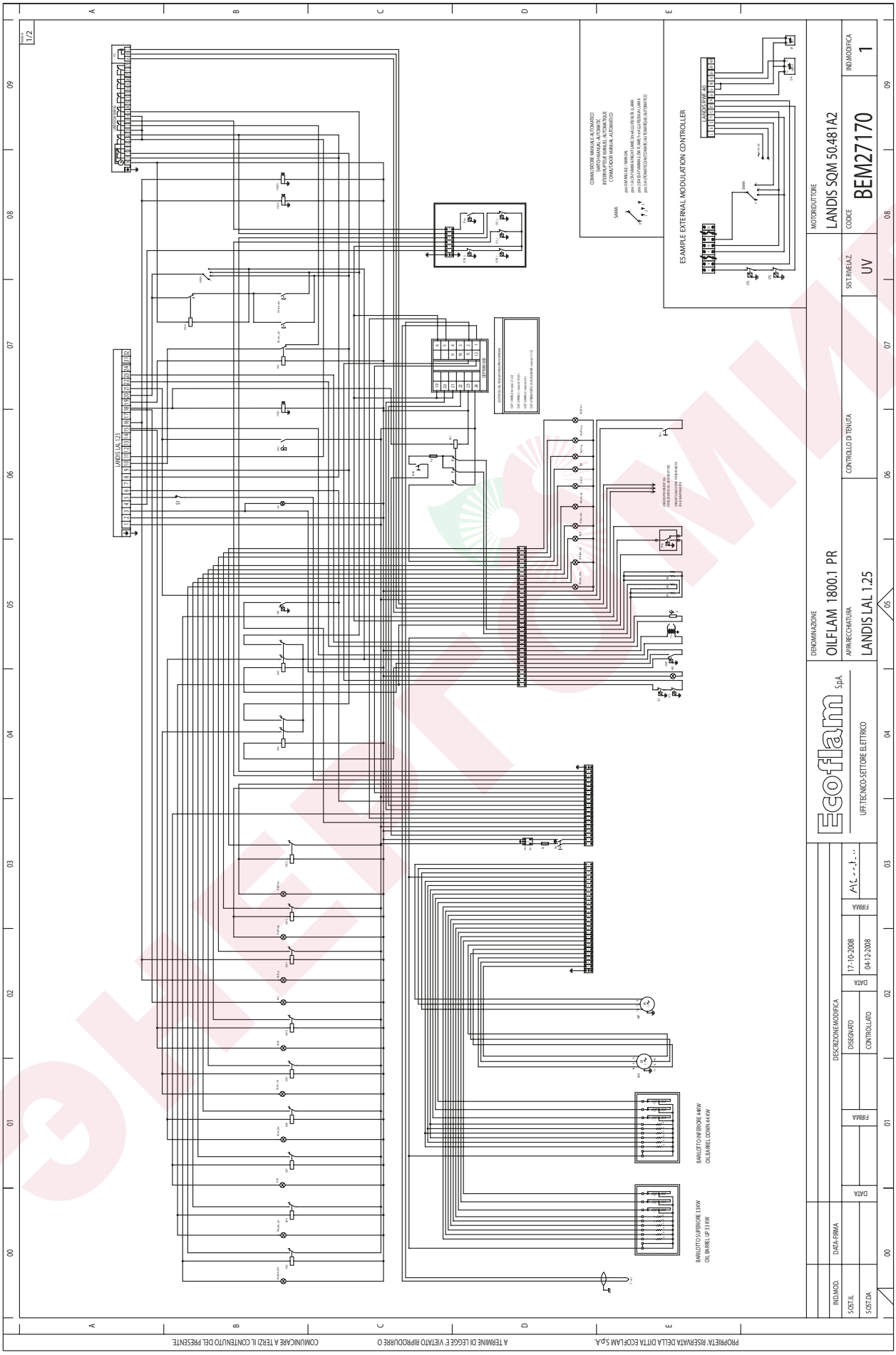
DENOMINAZIONE
OILFLAM 1800.1 PR
APPARECCHIATURA
LANDIS LAL 1.25
Ecoflam SpA
UFF.TECNICO-SETTORE ELETTRICO
CONTROLLO DI TENUTA
SISTEMA EAZ
UV
MOTORIDUTTORE
LANDIS SQM 50.481 A2
CODICE
BEM27170
INDMODIFICA
1
ES-AMPLE EXTERNAL MODULATION CONTROLLER
LANDIS LAL 1.25
BARILOTTO INFERIORE 440W
OIL BARREL DOWN 440 KW
BARILOTTO SUPERIORE 330W
OIL BARREL UP 33 KW
DESCRIZIONE MODIFICA
DISEGNATO
CONTROLLATO
DATA
FIRMA
17-10-2008
04-12-2008
INDMOD.
SOST.IL
SOST.DA
DATA-FIRMA
PROPRIETA' RISERVATA DELLA DITTA ECOFLAM S.p.A.
A TERMINE DI LEGGE E' VIETATO RIPRODURRE O
COMUNICARE A TERZI IL CONTENUTO DEL PRESENTE

PROPRIETA' RISERVATA DELLA DITTA ECOFLAM S.p.A. A TERMINE DI LEGGE E' VIETATO RIPRODURRE O COMUNICARE A TERZI IL CONTENUTO DEL PRESENTE.

Z	FILTRO ANTIDISTURBIO ANTI AMMING FILTER FILTRE ANTIPARASITES FILTRO DE PROTECCION ANTIDISTURBIO
B	FOTORESISTENZA PHOTO-RESISTOR PHOTORESISTANCE FOTORESISTENCIA
FU	FUSIBILE FUSE FUSIBLE FUSIBLE
RA	RESISTENZA AUSILIARIA AUXILIARY RESISTOR RESISTANCE AUXILIAIRE RESISTENCIA AUXILIARIA
HLB	LAMPADA DI BLOCCO LOCK-OUT LAMP LAMPE DE SECURITE ESPIA DE BLOQUEO
HLF	LAMPADA DI FUNZIONAMENTO WORKING LAMP LAMPE DE FONCTIONNEMENT ESPIA DE FUNCIONAMIENTO
HLF tr	LAMPADA DI FUNZIONAMENTO TRASFORMATORE TRANSFORMER LAMP
HLF vp	LAMPADA DI FUNZIONAMENTO ELETTROVALVOLA PILOTA PILOT GAS VALVE LAMP
HLR	LAMPADA RESISTENZE RESISTOR LAMP TEMOIN RESISTENCES INDICADOR RESISTENCIAS
HLserv_down	LAMPADA CHIUSURA SERVOMOTORE AIR DAMPER MOTOR CLOSING LAMP
HLserv_up	LAMPADA APERTURA SERVOMOTORE AIR DAMPER MOTOR OPENING LAMP
HLBTmp	LAMPADA BLOCCO TERMICO MOTORE VENTILATORE FAN MOTOR LOCK OUT LAMP
HLBTmv	LAMPADA BLOCCO TERMICO MOTORE POMPA OIL PUMP MOTOR LOCK OUT
KA2	RELE' RELAY RELAIS RELE'
KA3	RELE' RELAY RELAIS RELE'
KA4	RELE' RELAY RELAIS RELE'
KA5	RELE' RELAY RELAIS RELE'
KA6	RELE' RELAY RELAIS RELE'
KA7	RELE' RELAY RELAIS RELE'
KA8	RELE' RELAY RELAIS RELE'
KA9	RELE' RELAY RELAIS RELE'
KA10	RELE' RELAY RELAIS RELE'
KA11	RELE' RELAY RELAIS RELE'

KA12	RELE' RELAY RELAIS RELE'
KA13	RELE' RELAY RELAIS RELE'
STSR	TERMOSTATO DI SICUREZZA RESISTENZE RESTOR SAFETY TERMOSTAT THERMOSTAT DE SECURITE RESISTANCES TERMOSTATO DE SEGURIDAD RESISTENCIAS
STS	TERMOSTATO DI SICUREZZA SAFETY THERMOSTAT THERMOSTAT DE SECURITE TERMOSTATO DE SEGURIDAD
TV	TRASFORMATORE IGNITION TRANSFORMER TRANSFORMATEUR D'ALLUMAGE TRANSFORMADOR
YVGP	ELETTROVALVOLA GAS PILOTA PILOT FLAME SOLENOID GAS VALVE ELECTROVANNE GAZ PILOTE ELECTROVALVULA GAS PILOTO
YVGPS	ELETTROVALVOLA GAS PILOTA SICUREZZA PILOT FLAME SOLENOID SAFTARY GAS VALVE ELECTROVANNE GAZ PILOTE ELECTROVALVULA GAS PILOTO
YVO1	ELETTROVALVOLA OLIO FIRST STAGE HEAVY OIL SOLENOID VALVE ELECTROVANNE 1T ALLURE ELECTROVALVULA FUEL PESADO DE 1 ^ LLAMA
SPao	PRESSOSTATO OLIO ANELLO OIL RING PRESSURE
RP	RESISTENZA POMPA PUMP RESISTOR RESISTANCE POMPE RESISTENCIA BOMBA
SAL	INTERRUTTORE DI LINEA WORKING SWITCH INTERRUPTEUR DE LIGNE INTERRUPTOR DE LINEA
SAMA	COMMUTATORE MANUALE-AUTOMATICO SWITCH (MANUAL-AUTOMATIC) INTERRUPTEUR MANUEL-AUTOMATIQUE CONMUTADOR MANUAL-AUTOMATICO
STL_I	TERMOSTATO DI LAVORO INFERIORE DOWN WORKING THERMOSTAT THERMOSTAT TRAVAIL TERMOSTATO DE TRABAJO
STU_I	TERMOSTATO DI LIVELLAMENTO INFERIORE DOWN LEVELLING OF THERMOSTAT THERMOSTAT DE NIVELLEMENT TERMOSTATO DE NIVELACION
STSR_S	TERMOSTATO DI SICUREZZA RESISTENZE SUPERIORE UP RESTOR SAFETY TERMOSTAT THERMOSTAT DE SECURITE RESISTANCES TERMOSTATO DE SEGURIDAD RESISTENCIAS
STSR_I	TERMOSTATO DI SICUREZZA RESISTENZE INFERIORE UP RESTOR SAFETY TERMOSTAT THERMOSTAT DE SECURITE RESISTANCES TERMOSTATO DE SEGURIDAD RESISTENCIAS
SA sr	PULSANTE DI SBLOCCO REMOTO EXTERNAL RESET AND LOCK OUT BUTTON
SA serv up	PULSANTE SERVOCOMANDO ARIA SU UP AIR SERVO CONTROL BUTTON
SA serc_dw	PULSANTE SERVOCOMANDO ARIA GIU DOWN AIR SERVO CONTROL BUTTON
SPA	PRESSOSTATO ARIA AIR PRESSURE SWITCH PRESSOSTAT AIR PRESOSTATO AIRE
STAB	TERMOSTATO DI ALTA-BASSA FIAMMA HIGH-LOW FLAME THERMOSTAT THERMOSTAT GRANDE-PETITE ALLURE TERMOSTATO DE ALTA-BAJA LLAMA
	TERMOSTATO CALDAIA BOILER THERMOSTAT THERMOSTAT CHAUDIERE TERMOSTATO CALDERA
STmr	TERMOSTATO DI MINIMA RITORNO THERMOSTAT MIN THERMOSTAT DE MIN TERMOSTATO DE MINIMA

S1	FINE CORSA LIMIT SWITCH INTERRUPTEUR DE FIN DE COURSE LIMITADOR DE CARRERA
SARA	INTERRUTTORE RESISTENZE AUSILIARIE AUX HEATER SWITCH INTERRUPTEUR DES RESISTACES AUXILIAIRES INTERRUPTOR RESISTENCIA AUXILIAR

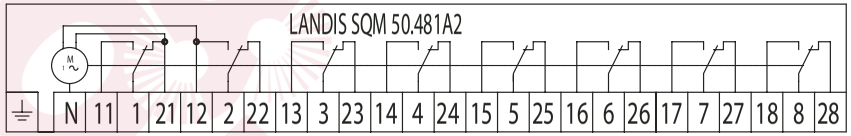

I: CAMMA DI REGOLAZIONE ARIA ALTA FIAMMA LAVORO
II: CAMMA CHIUSURA TOTALE
III: CAMMA REGOLAZIONE ARIA ACCENSIONE FIAMMA
IV: CAMMA REGOLAZIONE ARIA BASSA FIAMMA
V: NON UTILIZZATA
VI: NON UTILIZZATA
VII: NON UTILIZZATA
VIII: NON UTILIZZATA

IND.MOD.	DATA-FIRMA	DESCRIZIONE MODIFICA							
SOST.IL		DATA		FIRMA		DI SEGNATO	DATA	16-10-2008	FIRMA
SOST.DA						CONTROLLATO			

Ecoflam S.p.A.
UFF.TECNICO-SETTORE ELETTRICO

DENOMINAZIONE			MOTORIDUTTORE	
OILFLAM 1800.1 PR			LANDIS SQM 50.481A2	
APPARECCHIATURA	CONTROLLO DI TENUTA	SIST. RIVELAZ.	CODICE	IND.MODIFICA
LANDIS LAL 1.25		UV	BEM27170	

Ecoflam

420010293900 OILFLAM 1500.1 PR - 1800.1 PR

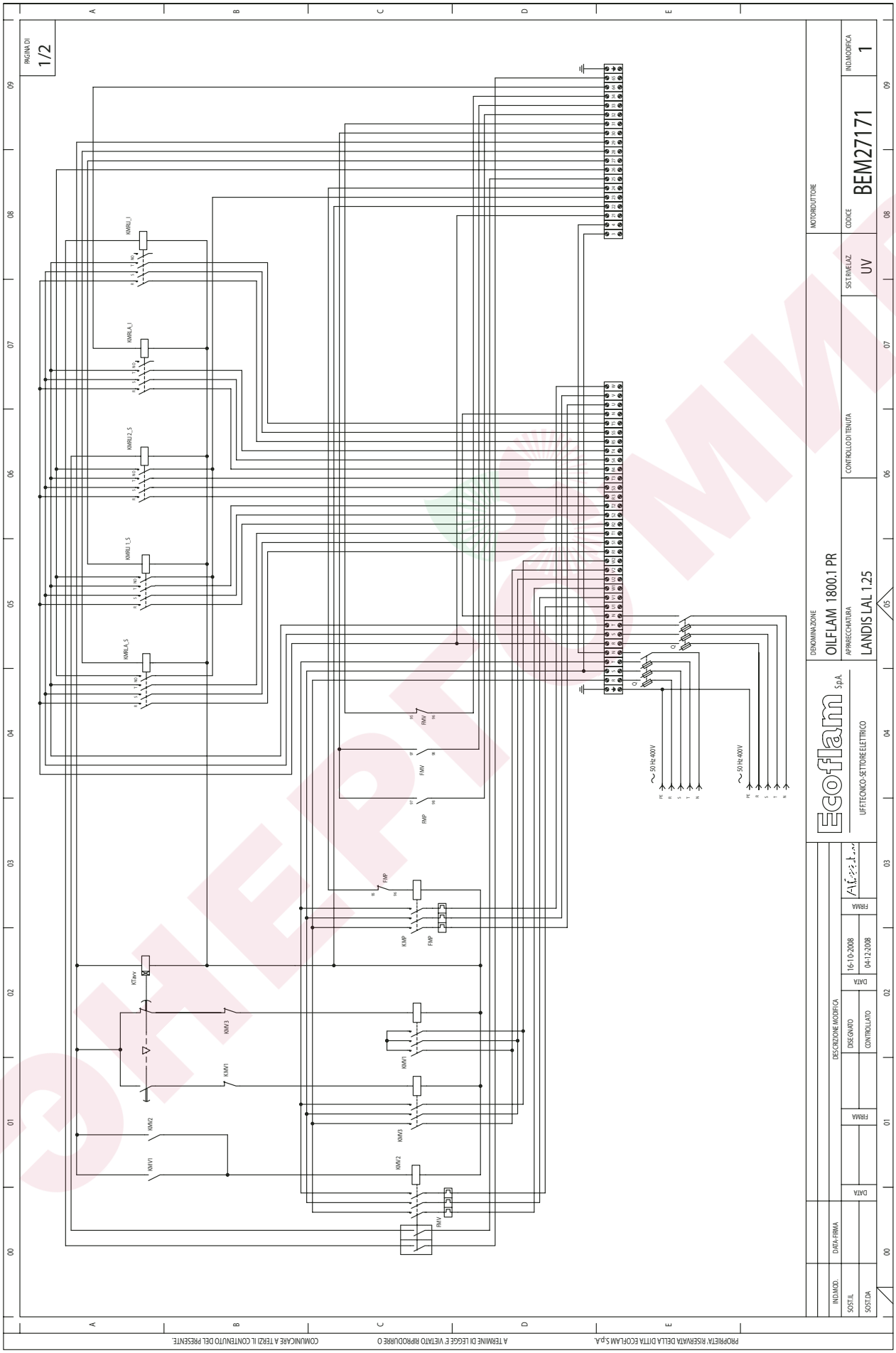
PAGINA DI
1/2
KMRLI_I
KMRLA_I
KMRL2_S
KMRL1_S
KMRL_A_S
KTdrv
KMV3
KMV1
KMV2
KMV1
KMV3
KMV2
RMV1
KMP
FMP
FMP
FMW
FMW
FMP
~50 Hz 400V
~50 Hz 400V
MOTORIDUTTORE
CODICE
BEM27171
INDMODIFICA
1
SOSTRIMELAZ.
UV
CONTROLLO DI TENUTA
DENOMINAZIONE
OILFLAM 1800.1 PR
APPARECCHIATURA
LANDIS LAL 1.25
Ecoflam S.p.A.
UFFTECNICO-SETTORE ELETTRICO
DESCRIZIONE MODIFICA
DISEGNATO
CONTROLLATO
DATA
16-10-2008
04-12-2008
FIRMA
INDMOD.
DATA-FIRMA
SOST.IL
SOST.DA
PROPRIETA' RISERVATA DELLA DITTA ECOFLAM S.p.A.
A TERMINE DI LEGGE E VIETATO RIPRODURRE O
COMUNICARE A TERZI IL CONTENUTO DEL PRESENTE

PAGINA DI 2/2

Q	INTERRUTTORE GENERALE CON FUSIBILE MAIN SWITCH WITH FUSE INTERRUPTEUR GENERAL AVEC FUSIBLE INTERRUPTOR GENERAL CON FUSIBLE
FMP	RELE' TERMICO MOTORE POMPA MOTOR PUMP THERMAL RELAY RELAIS THERMIQUE MOTEUR POMPE RELE' TERMICO MOTOR BOMBA
FMV	RELE' TERMICO MOTORE VENTILATORE MOTOR THERMAL RELAY (FAN MOTOR) RELAIS THERMIQUE MOTEUR VENTILATEUR RELE' TERMICO MOTOR VENTILADOR
KMRLA_S	CONTATTORE RESISTENZE DI LAVORO SUPERIORE UP WORKING RESISTOR SWITCH INTERRUPTEUR DES RESISTANCES DE TRAVAIL INTERRUFTOR DE LAS RESISTENCIAS DE TRABAJIO
KMRLI 1_S	CONTATTORE RESISTENZE DI LIVELLAMENTO 1 SUPERIORE UP 1 S.T LEVELLING RESISTOR SWITCH INTERRUPTEUR DES RESISTANCES DE NIVELLEMENT INTERRUFTOR DE LAS RESISNCIAS DE NIVELACION
KMRLI 2_S	CONTATTORE RESISTENZE DI LIVELLAMENTO 2 SUPERIORE UP 2 N.D LEVELLING RESISTOR SWITCH INTERRUPTEUR DES RESISTANCES DE NIVELLEMENT INTERRUFTOR DE LAS RESISNCIAS DE NIVELACION
KMRLA_I	CONTATTORE RESISTENZE DI LAVORO INFERIORE DOWN WORKING RESISTOR SWITCH
KMRLI_I	CONTATTORE RESISTENZE DI LIVELLAMENTO INFERIORE DOWN LEVELLING RESISTOR SWITCH
KMP	CONTATTORE MOTORE POMPA POMP REMOTE CONTROL SWITCH CONTACTEUR MOTEUR POMPE EMPALME MOTOR BOMBA
KTaw	TEMPORIZZATORE ELETTRONICO AVVIAMENTO STELLA/TRINAGOLO ELECTRONIC TIMER WITH STAR/DELTA STARTER TEMPORIZADOR EL....CTRONICO PREPARADO PARA TEMPORIZADOR EL....CTRONICO PREPARADO PARA
KMV1	CONTATTORE DI STELLA STAR CONTACTOR CONTACTEUR D'ETOILE CONTATTORE DI STELLA
KMV2	CONTATTORE MOTORE VENTILATORE REMOTE CONTROL SWITCH (FAN MOTOR) CONTACTEUR MOTEUR VENTILATEUR TELERRUPTOR MOTOR VENTILATOR
KMV3	CONTATTORE DI TRIANGOLO CONTACTEUR TRIANGLE

PROPRIETA' RISERVATA DELLA DITTA ECOFLAM S.p.A. A TERMINE DI LEGGE E VIETATO RIPRODURRE O COMUNICARE A TERZI IL CONTENUTO DEL PRESENTE

IND.MOD.	DATA-FIRMA	DESCRIZIONE MODIFICA							
SOST.IL		DATA		FIRMA		DISEGNATO	DATA	16-10-2008	FIRMA
SOST.DA						CONTROLLATO			

Ecoflam S.p.A.
UFF.TECNICO-SETTORE ELETTRICO

DENOMINAZIONE: OILFLAM 1800.1 PR
APPARECCHIATURA: LANDIS LAL 1.25
CONTROLLO DI TENUTA:
SIST. RIVELAZ.: UV
MOTORIDUTTORE:
CODICE: BEM27171
IND.MODIFICA:

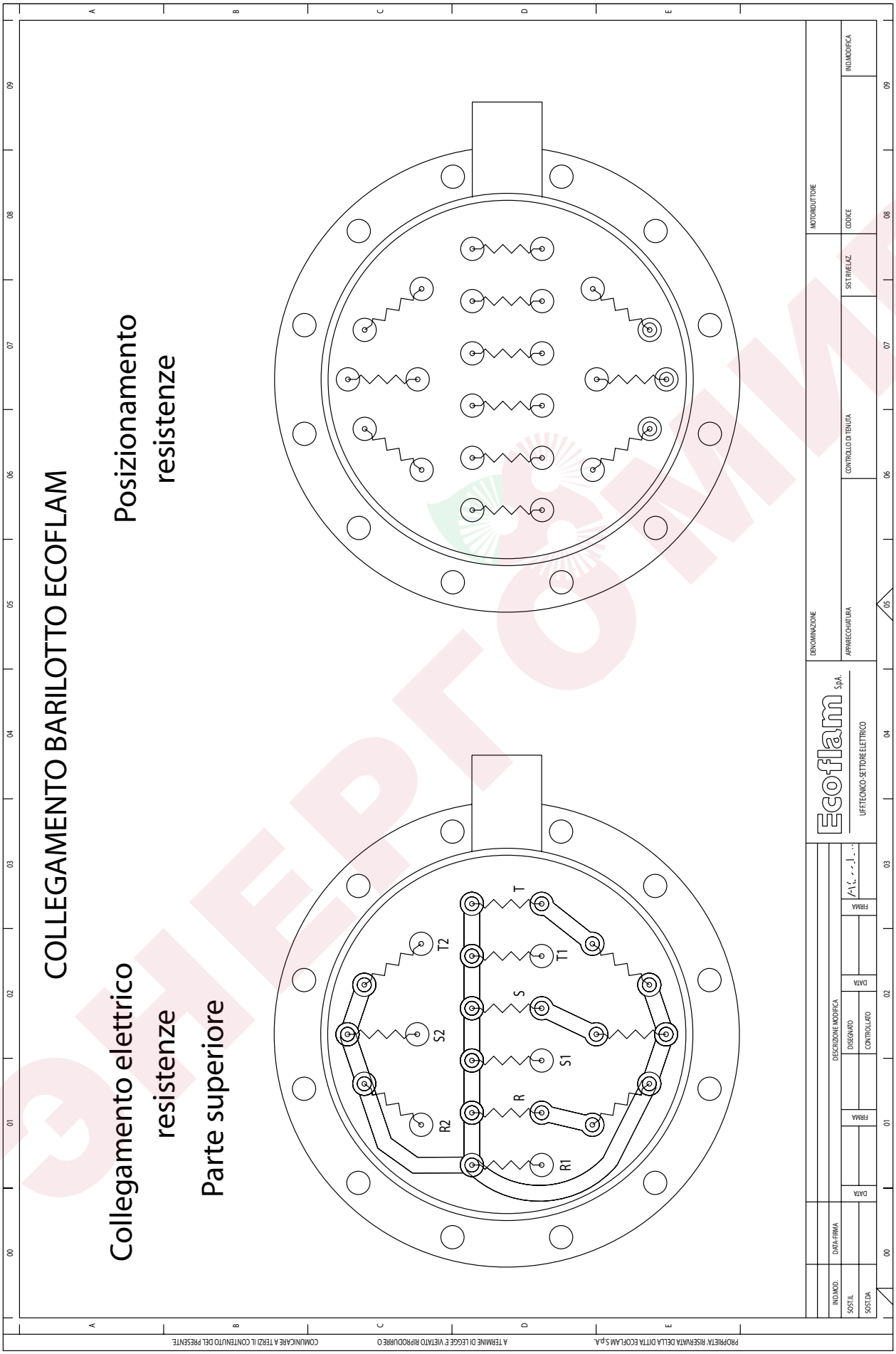
COLLEGAMENTO BARILOTTO ECOFLAM
Collegamento elettrico resistenze
Parte superiore
Posizionamento resistenze
R1
R2
R
S1
S2
S
T1
T2
T
Ecoflam S.p.A.
UF.TECNICO-SETTORE ELETTRICO
DENOMINAZIONE
APPARECCHIATURA
MOTORIDUTTORE
CONTROLLO DI TENUTA
SOSTituiscE
CODICE
IND.MODIFICA
DESCRIZIONE MODIFICA
DISEGNATO
CONTROLLATO
DATA
FIRMA
IND.MOD.
DATA-FIRMA
SOST.IL
SOST.DA
PROPRIETA' RISERVATA DELLA DITTA ECOFLAM S.p.A.
A TERMINE DI LEGGE E' VIETATO RIPRODURRE O
COMUNICARE A TERZI IL CONTENUTO DEL PRESENTE

OILFLAM 1800.1 PR

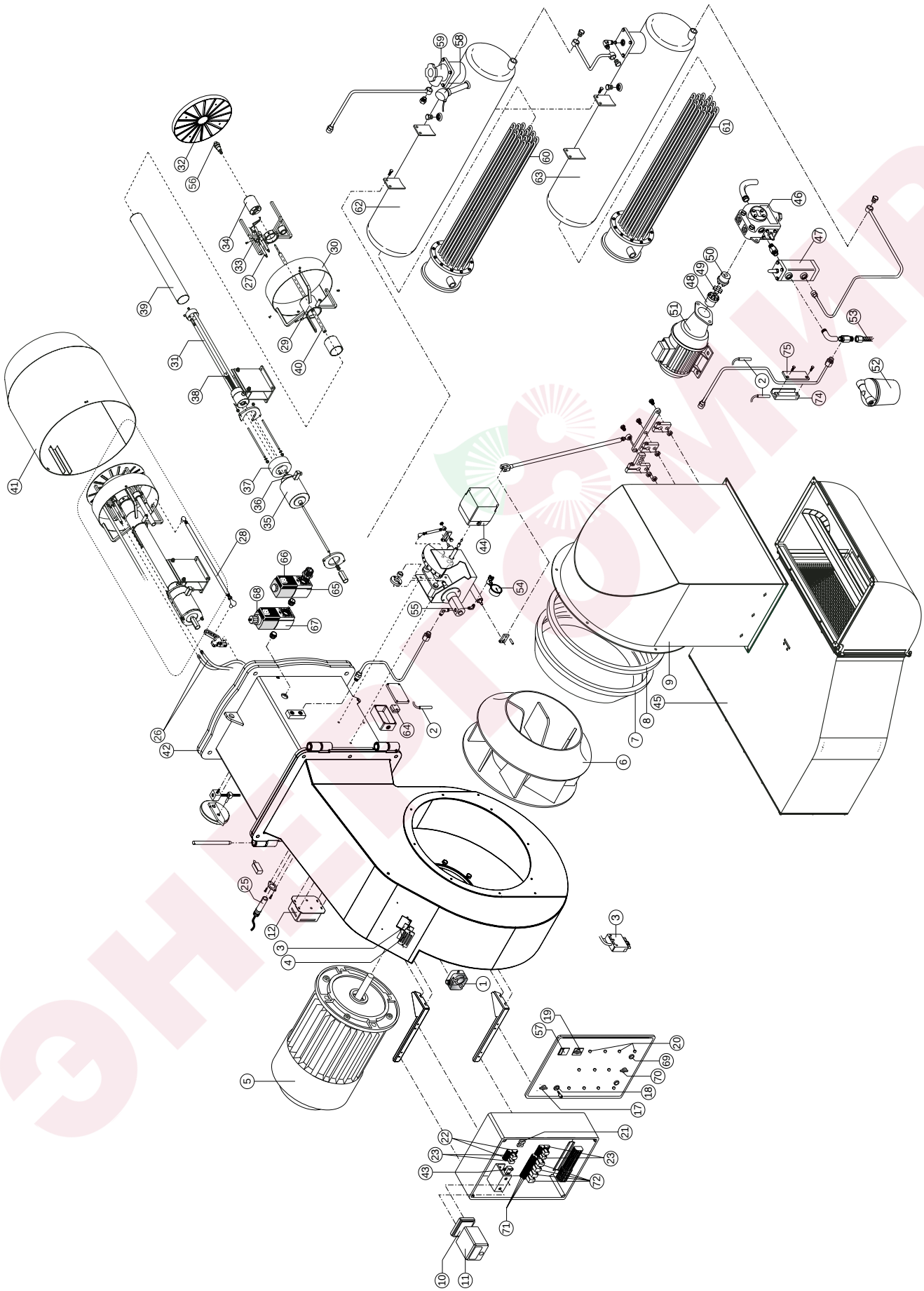

			Oilflam 1800.1 PR
N°	DESCRIPTION		code
1	AIR PRESSURE SWITCH	DG 10 U	65323041
2	HEATING ELEMENT PUMP	50 W	65323072
3	GLASS		65320487
4	PEED WINDOM FRAME		65320488
5	MOTOR	55 kW	65324463
6	FAN	GR-710/2 M.D.60	65324464
7	AIR CONVEYOR		65324465
8	CONVEYOR RING		65324466
9	AIR INTAKE		65324467
10	CONTROL BOX BASE	LANDIS	65320097
11	CONTROL BOX	LANDIS LAL1.25 TV22"	65320052
12	IGNITION TRANSFORMER	T8 13000/35	65323222
13	REMOTE CONTROL SWITCH		-
14	REMOTE CONTROL SWITCH (PUMP)		-
15	MOTOR THERMAL RELAY		-
16	MOTOR THERMAL RELAY (PUMP)		-
17	MAIN SWITCH	COMEPI ART.ECX1252	65324098
18	RESET BUTTON KEY	COMEPI a.ECX1430	65324468
19	SELECTOR	Giovenzana a.C01600029	65323063
20	LAMP	LYVIA 10x28 BA9S	65324100
21	FUSE SUPPORT	HK 520 04/1 10A	65324279
22	RELÉ BASE	FINDER	65323152
23	RELÉ	FINDER MINI 40.52	65323142
24	TIMER		-
25	PHOTORESISTOR	LANDIS QRB1A-A050B70A2	65320076
26	IGNITION CABLE	TC	65320946
27	IGNITION ELECTRODES SET		65320918
			65320919
28	ROD FIRING HEAD		
29	HOLDER WAISTBAND		65324469
30	WAISTBAND		65324470
31	OIL FIRING HEAD		65324471
32	DISC		65324472
33	SUPPORT NOZZLE HOLDER		65324473
34	NOZZLE HOLDER		65324474
35	COIL	EL011	65323809
36	CONNECTOR WITH RECTIFIER		65323571
37	RING		65321721
38	SPRING HOLDER		65321720
39	PIPE		65324475
40	ROD NOZZLE HOLDER	TC	65324476
41	BLAST TUBE	TC	65324477
42	GASKET ISOMART		65324478
43	ANTIJAMMING FILTER		65323170
44	AIR DAMPER MOTOR	LANDIS SQM50.481A2	65322902
45	SILENCER		
46	OIL PUMP	SUNTEC T5C105	65322998
47	OIL PUMP VALVE	SUNTEC TV40011	65322995
48	COUPLING (MOTOR)		65324479
49	UNION		65321791
50	COUPLING (PUMP)		65324364
51	PUMP MOTOR	ABB 4 KW	65324542
52	OIL FILTER		
53	HOSES		
54	MANOMETER	CEWAL R1/4 D50-40BAR	3142096
55	ADJUSTMENT OF OIL PRESSURE	BGH-PRO-VR	65324480
56	NOZZLE	BERGONZO 1400 kg/h	65323537
57	ADJUSTMENT OF FUEL TEMPERATURE	Gefran 600	65322045
58	THERMOCOUPLE	TC6MD2JBC	65322046
59	FILTER	U21008/01	65323158
60	UP HEATER	30 kW	65323091
61	DOWN HEATER	44 KW	65323092
62	UP OIL TANK		65324481
63	DOWN OIL TANK		65324482

TC = SHORT HEAD TL = LONG HEAD

N°	DESCRIPTION		OILFLAM 1800.1 PR code
64	THERMOSTAT	IMIT TR2 40/200	65323147
65	PILOT GAS VALVE SAFETY	DUNGS SV-507	65323689
66	COIL	DUNGS SV-507	
67	PILOT GAS VALVE	DUNGS SV-DLE 507	65323690
68	COIL	DUNGS SV-DLE 507	
69	BUTTON	COMEPI art.ECX1100	65324483
70	SELECTOR	COMEPI art.ECX1350	65324278
71	RELE BASE	94.74 SMA	65323150
		94.72 SMA	65323149
72	RELE	FINDER 5534	65323140
		FINDER 5532	65323139
73	MODULATING UNIT	LANDIS RWF 40	-
74	PREHEATED'S AUX. RESISTOR HOLDER		65321716
75	FIXING PLATE		65321717

TC = SHORT HEAD TL = LONG HEAD

PROCEDURE FOR FUEL OIL BURNER OPERATION TESTING

- Verify that the auxiliary resistors (heating cable for auxiliary block circuit , pump resistor) are fed since 5 hours at least.
- Verify that the electrical voltage is correct: 380 Volt three-phase / 220 Volt single-phase.
- Verify that the selector gas/fuel oil in in fuel oil position.
- Verify that all safety devices boiler-burner are correctly rearmed.
- Before igniting the burner, verify that the fuel oil circuit is full.
- Switch on manually the pump motor and verify by the manometer the circuit pressure.
- Switch on the burner and check that the ignition circuit is correct.
- The servomotor opens the air damper for starting the pre-purge in the combustion chamber.
- After the pre-uprge operation has finished, the air damper goes to minimum position and the burner is ignited at minimum power.
- If the selector (0-1-2-3) is in position 1, the burner will be brought manually to maximum power.
  If the selector (0-1-2-3) is in position 2, the burner will be brought manually to minimum power.
  If the selector (0-1-2-3) is in position 3, the power will be set by RWF40 that will adapt it according to the request.
- Verify at chimney that the oxigen values are correct.
- If the oxigen values are not correct, modify the prophile by the oil adjustment cam in order to obtain correct values.

NOTE :

ЭНЕРГОМИР

NOTE :

ЭНЕРГОМИР

ЭНЕРГОМИР